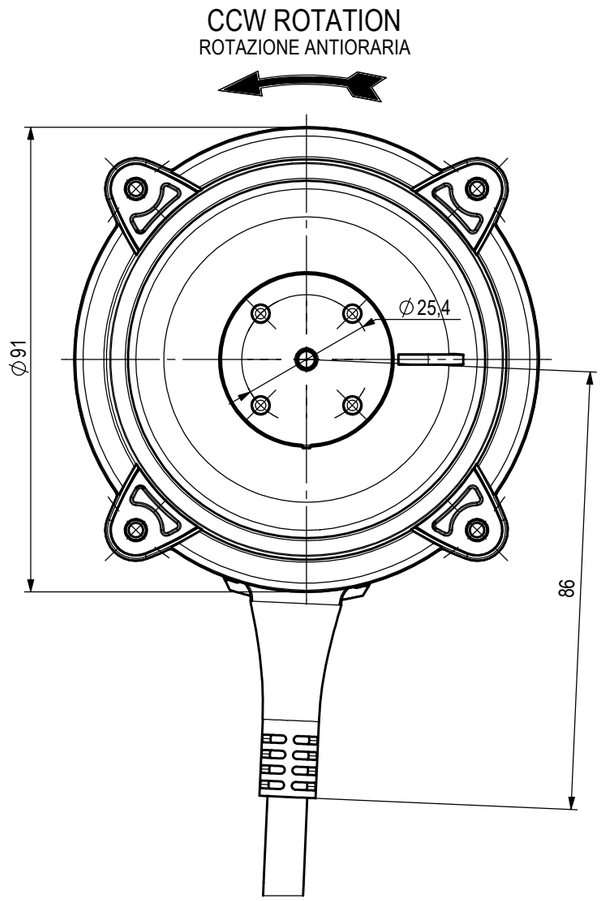

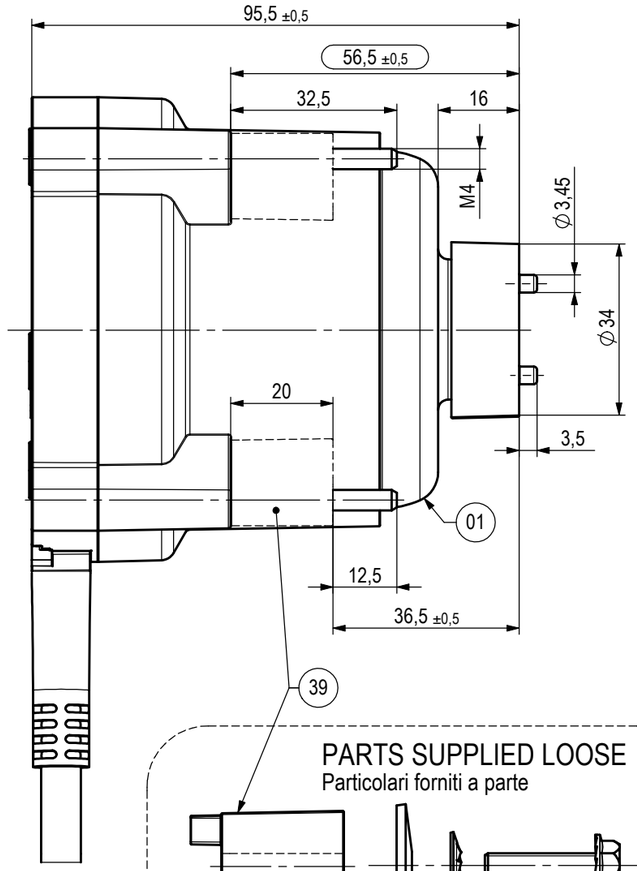

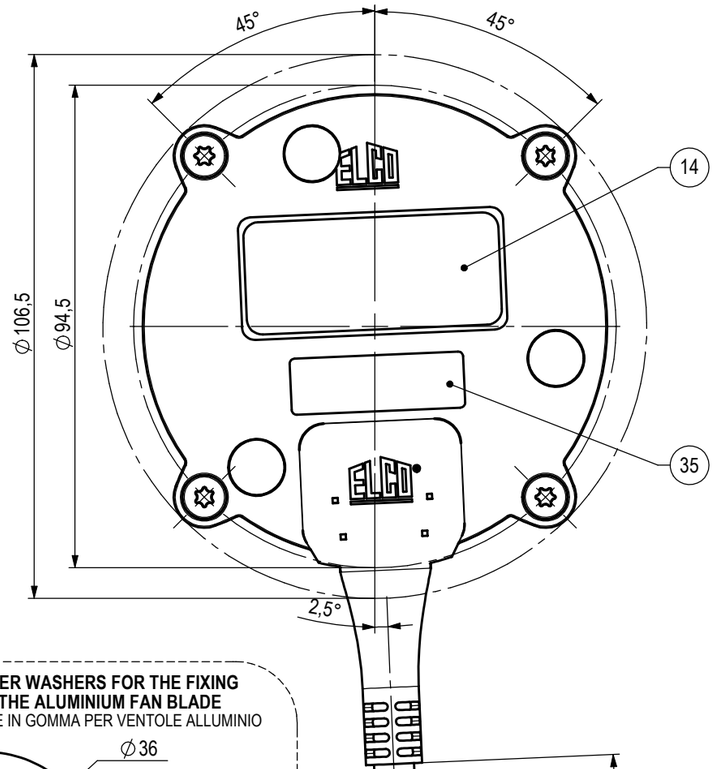

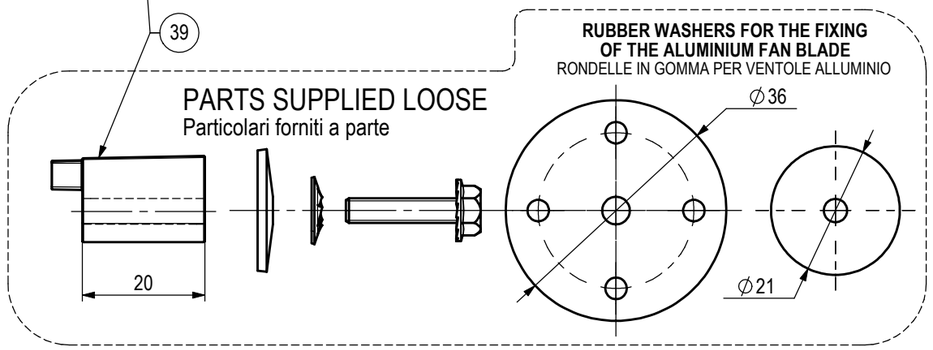

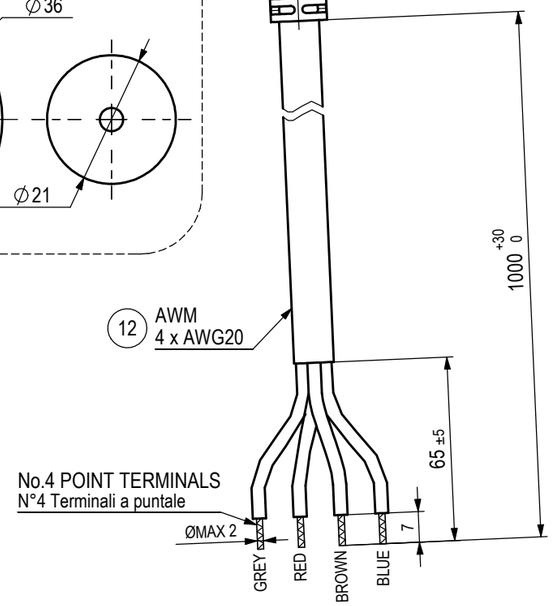

PEREMPTORY

Running test after the complete assembly, **cable included**

Eseguire il collaudo ad assemblaggio completo, **cavo incluso**

CLASS "B" MOTOR - BALL BEARINGS MANUFACTURED (Motore in classe "B" - Esecuzione a Cuscinetti)	
ELECTRONIC BOARD (Scheda elettronica)	**1H VS10 1850÷600Rpm**
PLASTIC BODY (Corpo in plastica)	-
PLASTIC BACK COVER (Fondello in plastica)	-
PLASTIC FAN BLADE HUB (Portaventola in plastica)	-
ASSEMBLING SPECIFICATION (Normativa di Assemblaggio)	EL.UN.0098
OPERATING INSTRUCTIONS	OI-ECM
ELECTRICAL SPECIFICATION (Prescrizione controllo elettrico)	M.2123/8

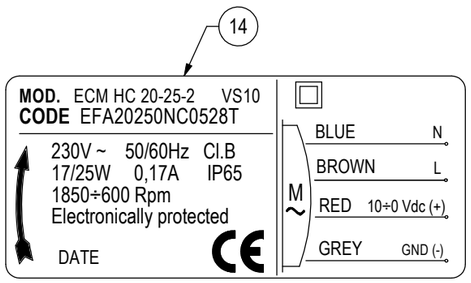

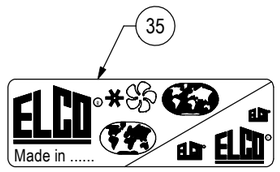

Rel.	Date	Description	Executor signature	Checked
.	.	.	.	.
.	.	.	.	.
.	.	.	.	.
.	.	.	.	.
.	.	.	.	.
.	.	.	.	.

M O D I F I C A T I O N S

For dimension without tollerance see standard UNI EN 22768-mK

Treatement .

Material .

A3

ELCO®

Drawn M.Cazzaniga

Date 25-11-15

Check E.Crippa

Scale ---

MOTOR ECM 20 230V VS N

230V 50/60Hz - **1850÷600 Rpm**

-

Weight gr. .

Ref. No R.S.15/0265 Camp.150138/1

Release -

EFA20250NC0528T

DRAWING MADE BY **CAD** HAND MADE MODIFICATIONS ARE FORBIDDEN

THIS DRAWING IS OUR PROPERTY. ANY PARTIAL OR COMPLETE COPY IS FORBIDDEN WITHOUT PREVIOUS WRITTEN AUTHORISATION