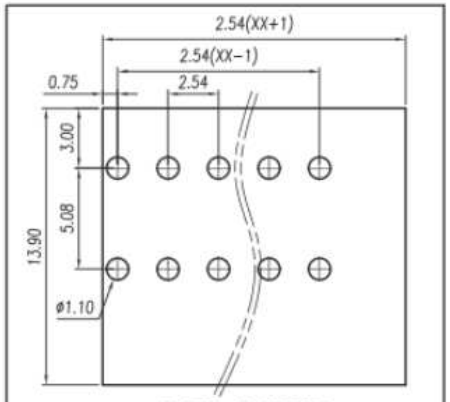

P.C.B. LAYOUT

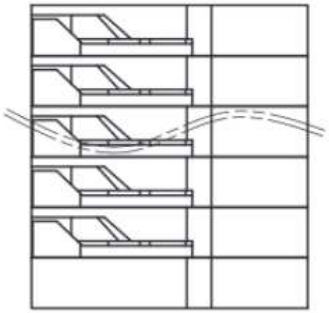

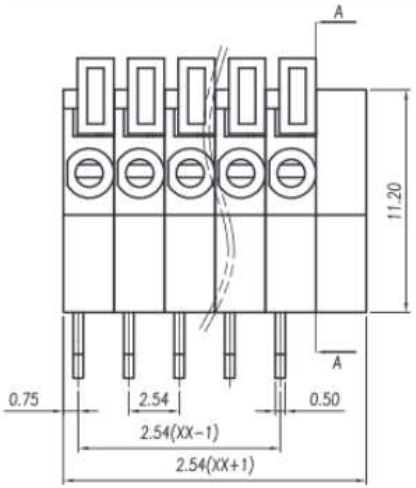

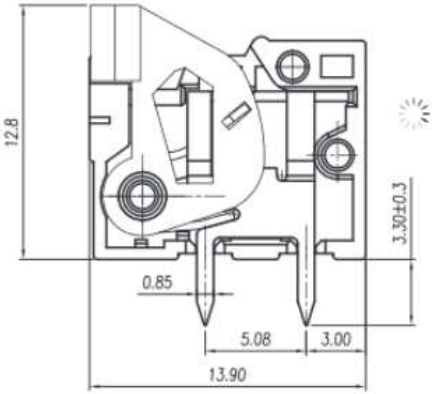

SECTION:A−A

参考标准/Standard	UL	IEC
额定电压/Rated voltage	150V	130V
额定电流/Rated current	2A	6A
接触电阻/Contact resistance	20mΩ	
绝缘电阻/Insulation resistance	500MΩ/DC500V	
使用线径/Wire range	26~20AWG	0.5mm²
耐 电 压/Wrth standing voltage	AC1300V/1 Min	
机 械 性 能/Mechanical		
剥线长度/Steip Length	11mm	
温度范围/Temp.Range	-40°C~+105°C	
瞬时温度/MAX Soldering	+250°C, for 5 Sec	
尺 寸/Dimensions		
间 距/Pitch	2.54mm	
极 数/Poles	1-XXp	
材 质 及 电 镀/Material		
塑 件/Housing	PA66，UL94V-0	
弹片/Shrapnel	Stainless steel	
焊 脚/Pin header	Copper alloy, Sn plated	

					TOLERANCE		UNIT	mm		
					X.X	± 0.30	SIZE	A4		
					X.XX	± 0.20	Orthographic Projection		NAME	Terminal Block
					X.XXX	± 0.15			PART NO	AC141R
REV	DATE	MODIFICATION HISTROY	CHANGE	APPROVE						