THIS DRAWING IS UNPUBLISHED. RELEASED FOR PUBLICATION 20
© COPYRIGHT 20 BY - ALL RIGHTS RESERVED.

REVISIONS

P	LTR	DESCRIPTION	DATE	DWN	APVD
	A	INITIAL RELEASED	11APR2016	L.Z	X.X
	B	EC-16-011351 NEW REVISE	01JUL2016	L.Z	X.X
	B1	REVISED PER ECR-16-012993	18SEP2016	L.Z	X.X

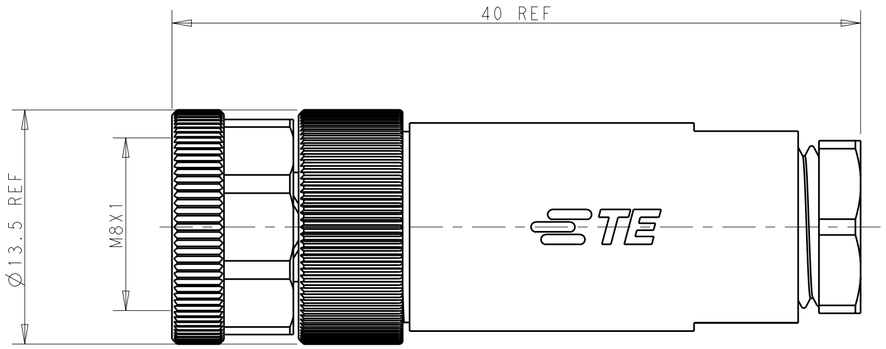

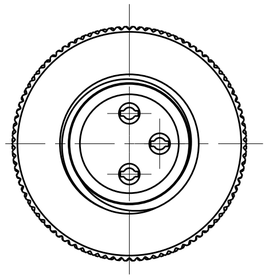

3POS

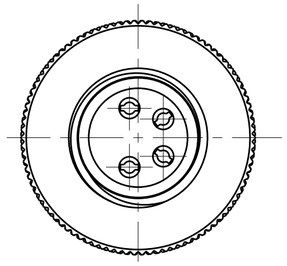

4POS

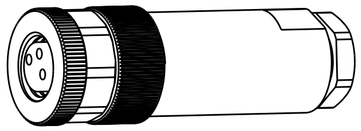

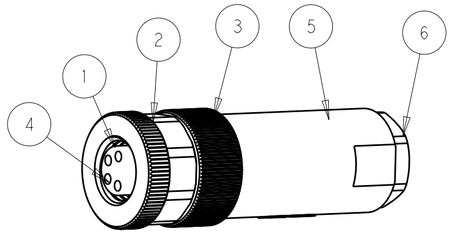

OPERATION TEMPERATURE	-40~85°C	-40~85°C
DEGREE OF PROTECTION	IP67	IP67
INSULATION RESISTANCE	>100MΩ	>100MΩ
RATED IMPULSE VOLTAGE	800V	1500V
MATERICAL GROUP	II	II
OVERVOLTAGE CATEGOYR	II	II
POLLUTION DEGREE	3	3
RATED CURRENT	3A	3A
RATED VOLTAGE	30V	60V
TECHNICAL DATA	T401000804X-000	T401000803X-000

TE PN	TYPE	
~~T4010008042-000~~	~~RPC-M8-FS-4CON-PG7-M~~	OBSOLETE
T4010008041-000	RPC-M8-FS-4CON-PG7-MU	
~~T4010008032-000~~	~~RPC-M8-FS-3CON-PG7-M~~	OBSOLETE
T4010008031-000	RPC-M8-FS-3CON-PG7-MU	

COMMENT	MATERIAL	DESCRIPTION	ITEM	T4010008042-000 (OBSOLETE)	T4010008041-000	T4010008032-000 (OBSOLETE)	T4010008031-000
-	PBT	PRESS SCREW	6	1	1	1	1
-	PBT	STRAIGHT PLASTIC HOUSING	5	1	1	1	1
SILVER 80U"	BRASS	M8 SCTREW ASSY REC TERMINAL	4	4	-	3	-
GOLD 3U"				-	4	-	3
NICKEL 80U"	BRASS	M8 SCREW ASSY OUT SCREW	3	1	1	1	1
NICKEL 80U"	BRASS	M8,FEMALE INSERT NUT	2	1	1	1	1
BLACK	PA	M8,FEMALE HSG,A CODE,4PIN	1	1	1	-	-
		M8,FEMALE HSG,A CODE,3PIN		-	-	1	1
				T4010008042-000	T4010008041-000	T4010008032-000	T4010008031-000

NOTES;
1. PARTS MATERIAL DATA:SEE TABLE
2. CONTACT FINISH:
   GOLD OVER NICKEL OR SILVER OVER NICKEL
3. CABLE WIRES:
   26AWG/0.14mm^2 Max & 24AWG/0.25mm^2 Max
4. ALL DIMENSIONS ARE FOR NOMINAL REFERENCE ONLY UNLESS OTHERWISE STATE
5. PACKAGIN: 1 PIECE IN A BAG
6. PN INFORMATION FOR ASSEMBLY PARTS
   T401000XXXX-000
   - CONTACT FINISH:
     1:GOLD OVER NICKEL
     2:SILVER OVER NICKEL
   - NUMBERS OFPINS:
     03:3 PINS
     04:4 PINS
     ...
   - CABLE OUTLET:
     8:PLASTIC(CABLE FEED:3.5~4.8mm)
     9:METAL(CABLE FEED:3.5~5.0mm)
     ...

注意事项;
1. 零件材料参见附表
2. 表面处理:镀金或镀银
3. 适用线材:26AWG/0.14mm2 Max &
   24AWG/0.25mm2 Max
4. 所有尺寸标注为基本参考,除非其它说明
5. 包装:每BAG装1PC
6. 料号数字代码参考上表

THIS DRAWING IS A CONTROLLED DOCUMENT.

DIMENSIONS: mm

TOLERANCES UNLESS OTHERWISE SPECIFIED:
0 PLC ±-
1 PLC ±0.20
2 PLC ±0.20
3 PLC ±0.20
4 PLC ±-
ANGLES ±-

MATERIAL - -
FINISH - -

DWN 12APR2016 LEAR ZHANG
CHK 12APR2016 KOBBY ZHAO
APVD 12APR2016 XU XIANG
PRODUCT SPEC 108-106140
APPLICATION SPEC 114-137144-1
WEIGHT -

TE Connectivity

NAME M8 FEMALE SCREW ASSY STRAIGHT UNSHIELDING CONNECTOR
-

SIZE	CAGE CODE	DRAWING NO	RESTRICTED TO
A2	-	C-T40100080XX000	-

CUSTOMER DRAWING | SCALE 2:1 | SHEET 1 OF 1 | REV B1

1471-9 (3/13)