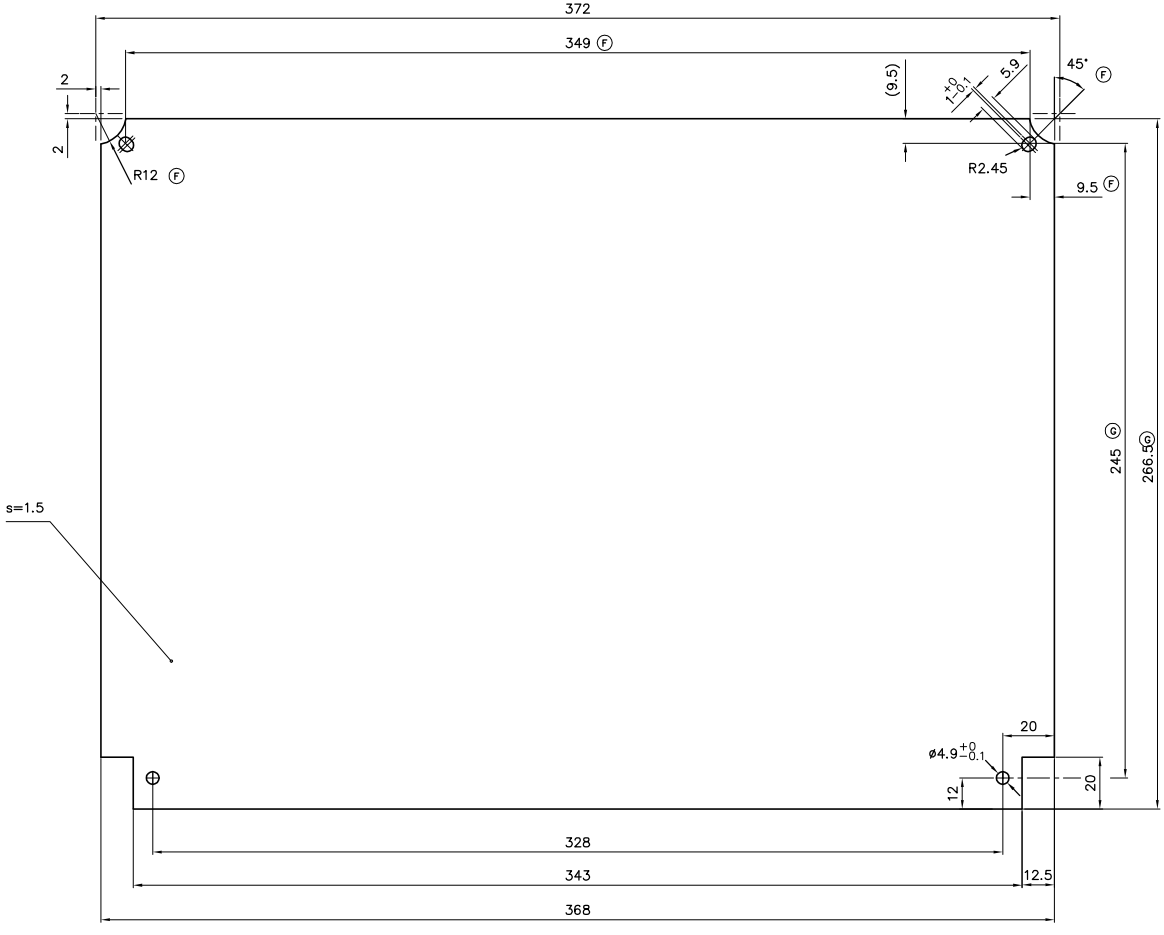
372
349 F
2
2
R12 F
(9.5)
1 +0 −0.1
5.9
45° F
R2.45
9.5 F
245 G
266.5 G
s=1.5
20
ø4.9 ±0 −0.1
12
20
328
343
12.5
368

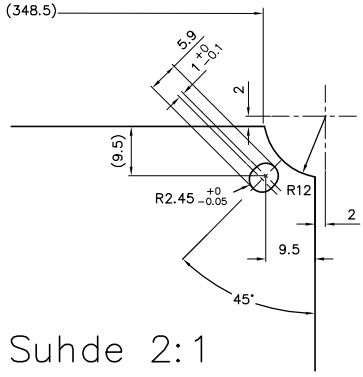
(348.5)
5.9
1 +0 −0.1
2
(9.5)
R2.45 +0 −0.05
R12
2
9.5
45°

Suhde 2:1