SOLDER SUFFIX	CUSTOMER TERMINAL	RoHS	LEAD(Pb)–FREE (6C)
LF3	Sn100%	Yes	Yes

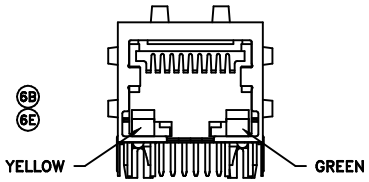

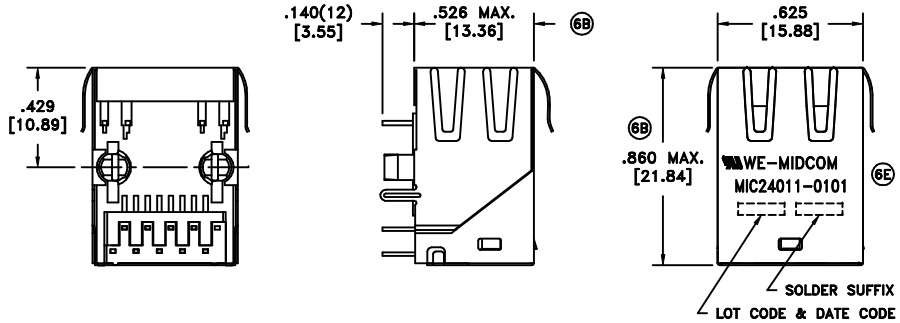

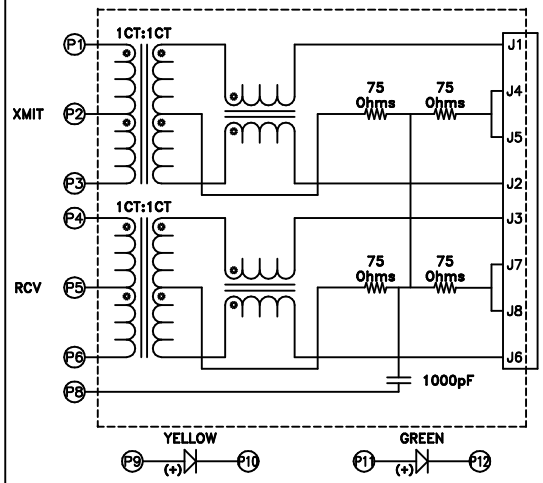

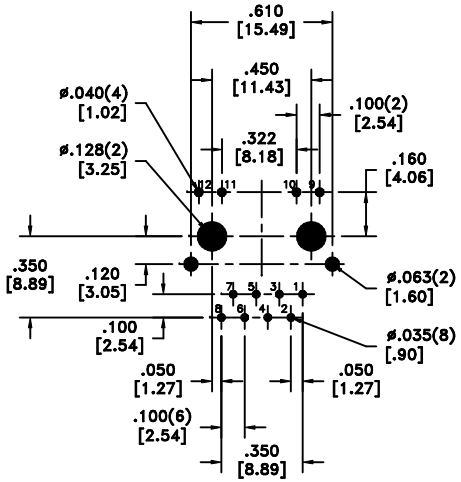

RECOMMENDED
P.C. PATTERN, COMPONENT SIDE

ELECTRICAL SPECIFICATIONS @ 25°C unless otherwise noted:

INDUCTANCE:	350uH min., 100kHz, 100mV, 8mADC, J1–J2; J3–J6, Lp.
DIELECTRIC RATING:	1500Vrms for 1 minute between P1–J1(tie P1+P4).
TURNS RATIO/POLARITY:	(P1–P3):(J1–J2) = 1:1, ±2%. (P4–P6):(J3–J6) = 1:1, ±2%.
INSERTION LOSS:	–1.0dB max., 1MHz – 100MHz.
RETURN LOSS:	–18dB min., 1M – 30MHz. –16dB min., 30M – 45MHz. –14dB min., 45M – 60MHz. –12dB min., 60M – 80MHz.
CROSSTALK:	–33dB min., 1MHz – 100MHz.
COMMON MODE REJECTION:	–35dB min., 1MHz – 100MHz.

OPERATING TEMPERATURE RANGE: 0°C to +70°C.

www.DataSheet4U.com

(6D)

PACKAGING TABLE	
X	PACKAGE
T	TUBE
W	TRAY

(6E)

AGENCY NUMBER	
UL60950–1	E205930

www.DataSheet4U.com

Unless otherwise specified:
Tolerances: Fractions: ±1/64
Angles: ±1° Decimals: ±.010[.25mm]
This drawing is dual dimensioned. Dimensions in brackets are in millimeters.

DRAWING TITLE
TRANSFORMER
RJ45–T8

Midcom
www.midcom–inc.com

REVISIONS: SEE SHEET 1

DRAWING NO.
MIC24011-0101X-LF3

REV. 6E 4/07

SCALE ---