ROHS-COMPLIANT

LTR	REV.	DESCRIPTION	DATE

HDMI MALE
PLASTIC:BLACK

DVI_D FEMALE
PLASTIC:BLACK

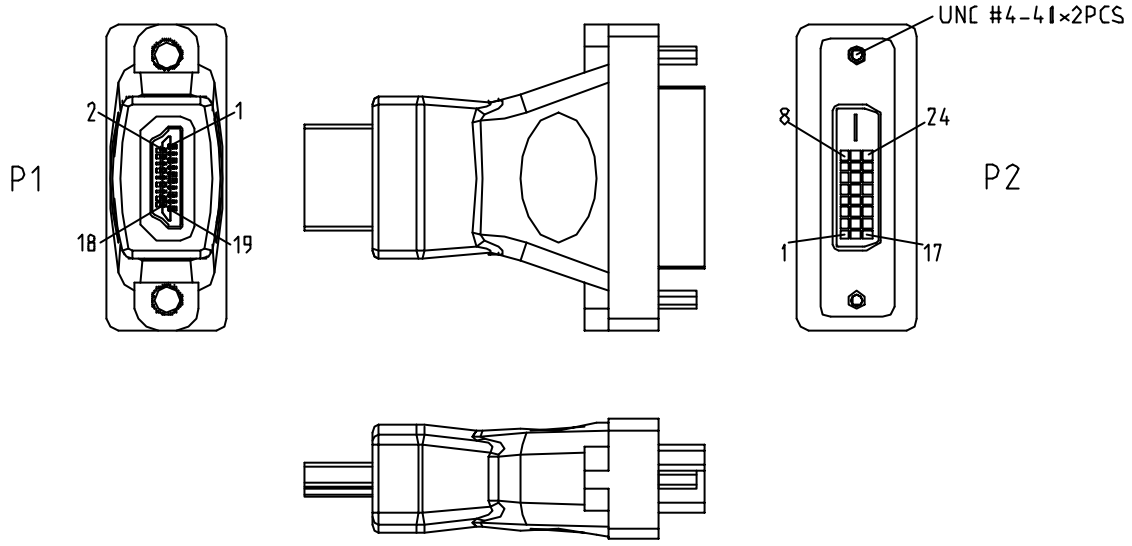

PIN OUT

HDMI P1	DVI_D P2	CABLE FUNCTION
1	2	TMDS DATA 2+
3	1	TMDS DATA 2-
2	3	TMDS DATA 2 SHIELD
4	10	TMDS DATA 1+
6	9	TMDS DATA 1-
5	11	TMDS DATA 1 SHIELD
7	18	TMDS DATA 1+
9	17	TMDS DATA 1-
8	19	TMDS DATA 1 SHIELD
10	23	TMDS CLOCK +
12	24	TMDS CLOCK -
11	22	TMDS CLOCK SHIELD
15	6	DDC CLOCK(SCL)
16	7	DDC DATA(SDA)
17	15	GROUND(+5V&DDC)
18	14	POWER +5V
19	16	HOT PLUG DETECT
SHELL	SHELL	GROUND

NOTE:
1.HOOK UP WIRE:NON-UL 28AWG
2.CONNECTOR:
P1: HDMI 19P MALE CONTACT:15u"; SHELL:NICKEL-PLATED .
P2: DVI 24+KEY DIGITAL FEMALE CONTACT:G/F,SHELL:NICKEL-PLATED .
3.INNER MOLD WITH COPPER FOIL
4.HOOD:MOLDED TYPE,PVC 45P,COLOR:BLACK(NK-K01) .
5.ELECTRICAL TEST:
(1)100% OPEN SHORT & MIS WIRE TEST.
(2)CONTACT RESISTANCE 3 ohm Max .
(3)INSULATION RESISTANCE 5M ohm Min .
6.PACKING: <1>EACH PC / POLYBAG + EAN CODE LABEL & ROHS LABEL
<2>EACH CARTON / ROHS LABEL(L×W=35×22mm)
7. EAN CODE:4260113560082

Tolerance Inch		M/M
.X	.015	.30
.XX	.010	.10
.XXX	.005	.05

Draw FANNIE 04/14/06'
Check
Engr

2DIRECT GMBH

Title
HDMI 19 MALE TO DVI_D 24+KEY FEMALE ADAPTOR

Customer P/N: AH0002

App'd | Customer:

Scale NONE | Units m/m | Third Angle Projection

Dwg No. 160-1293 | REV:A | Sheet 1/2

E009 V.01